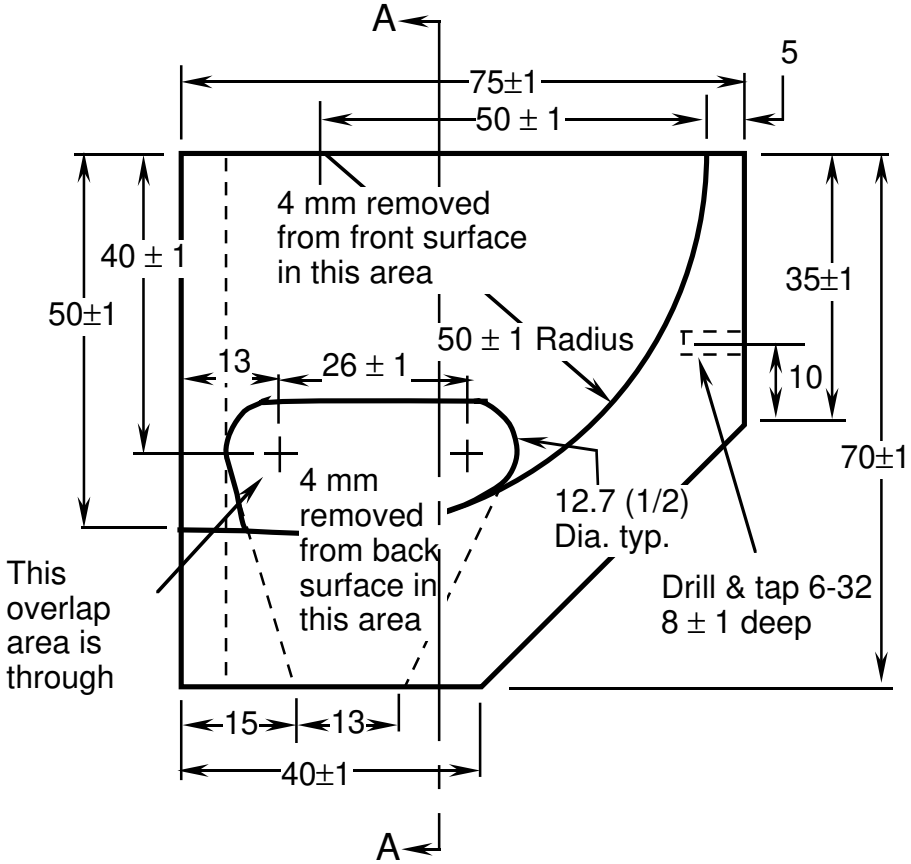

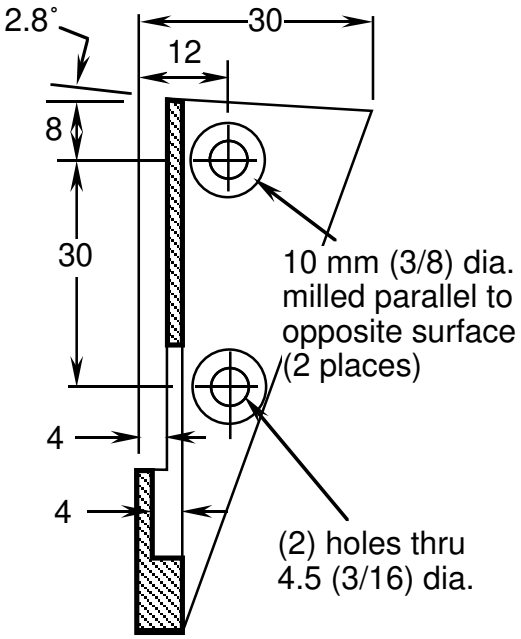

SECTION A-A

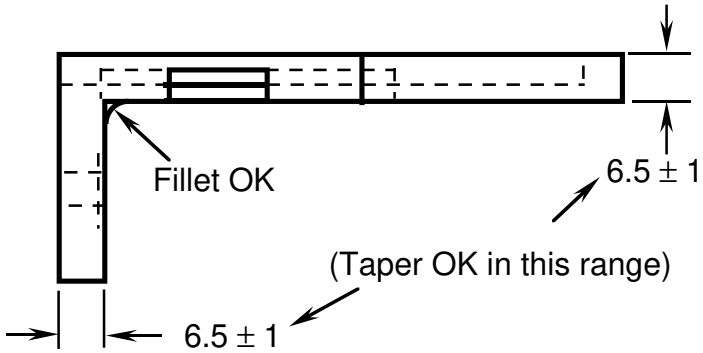

Dimensions are in mm with a tolerance of ± 0.1 unless stated otherwise. Dimensions in parentheses are in Inches

MICHIGAN STATE UNIVERSITY HIGH ENERGY PHYSICS			
DRAWN	R. Miller		
DATE	9-2-98	REV	C
PROJECT	ATLAS ITC Scintillator		
MATERIAL	(4x2x1/4)Alum. Angle		
TITLE	Left Fiber Guide		
DWG. NO	HEP-B-025 - 373		
SCALE	1:1		